Moon Eclipse PIR 400 Emergency - black



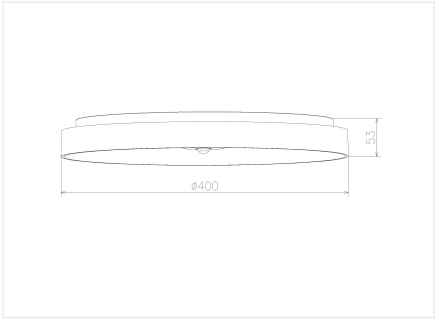

18-25-30 W **230 V** **IP 54** **CCT 2700K-3000K-4000K** **2275-3250-3600 lm** **CRI >80** **PF 0,90**

Reference	MNECPIR400BCCTE

Remarks

- incl. PIR Sensor
- * in case of power failure, the battery works for 3h on 290lm/4000K (diam 300 mm) and 313lm/ 4000K (diam 400 mm)

Uni-Bright
Belcrownlaan 13 Q
2100 Antwerpen

T: +32 (0)3 641 61 40
E: info@unibright.be

BTW BE 0431.540.033
RPR Antwerpen, department Antwerpen