Moon Eclipse PIR 300 Emergency - white



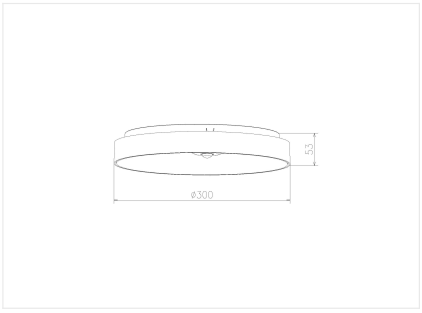

12-18-25 W 230 V IP 54 CCT 2700K-3000K-4000K 1450-2100-3057 lm CRI >80 PF 0,85-0,90

Reference	MNECPIR300WCCTE
Diameter	300 mm
Height	53 mm

Remarks

- incl. PIR Sensor
- * in case of power failure, the battery works for 3h on 290lm/4000K (diam 300 mm) and 313lm/ 4000K (diam 400 mm)

Uni-Bright
Belcrownlaan 13 Q
2100 Antwerpen

T: +32 (0)3 641 61 40
E: info@unibright.be

BTW BE 0431.540.033
RPR Antwerpen, department Antwerpen