Smart downlight 20W white

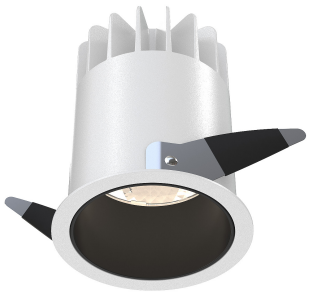

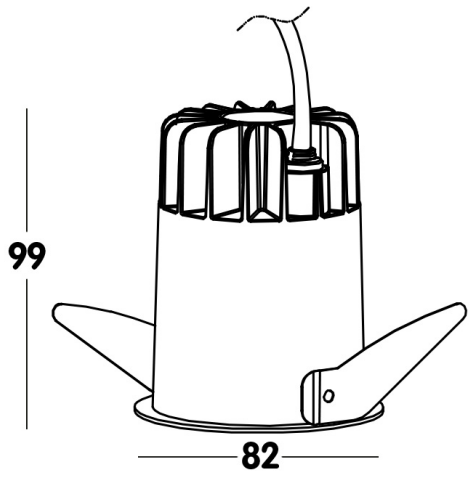

230 V | IP 20 | CCT AUTO CCT | 1600 lm | CRI 90 | 90° x 360°

Reference	SMDL2036W
Diameter	82mm
Material	Aluminium
Colour	White - RAL 9003
LED	Bridgelux
Lifetime +/-	50.000h
Colour temperature	Auto CCT
Beam	36°
!	Smart Control App
Cut-out-size	75mm
Buit-in-hight	98,5mm

Uni-Bright
Belcrownlaan 13 Q
2100 Antwerpen

T: +32 (0)3 641 61 40
E: info@unibright.be

BTW BE 0431.540.033
RPR Antwerpen, department Antwerpen