Move trimless S black 3000K



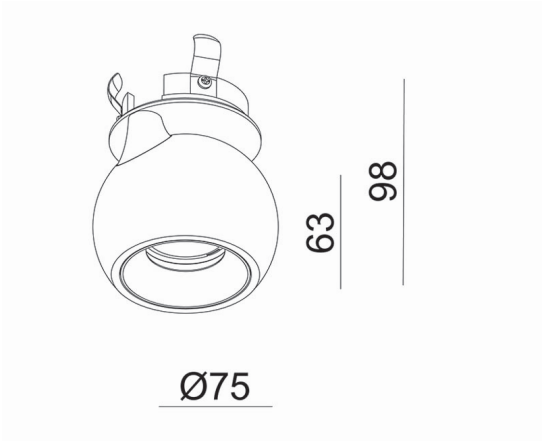

11 W IP 20 CCT 3000K 830 lm CRI >90

Reference	MOTRS930B
Diameter	75 mm
Height	63 mm
Material	Aluminium
Colour	Black - RAL 9005
LED	Citizen CLU701
CCT	3000K
Lumen	830 lm
CRI	>90
Beam	38°
IP	IP20
Led current	350 MA
!	excl. Driver
Energy label	G

Uni-Bright
Belcrownlaan 13 Q
2100 Antwerpen

T: +32 (0)3 641 61 40
E: info@unibright.be

BTW BE 0431.540.033
RPR Antwerpen, department Antwerpen