Mime S black - 3000K

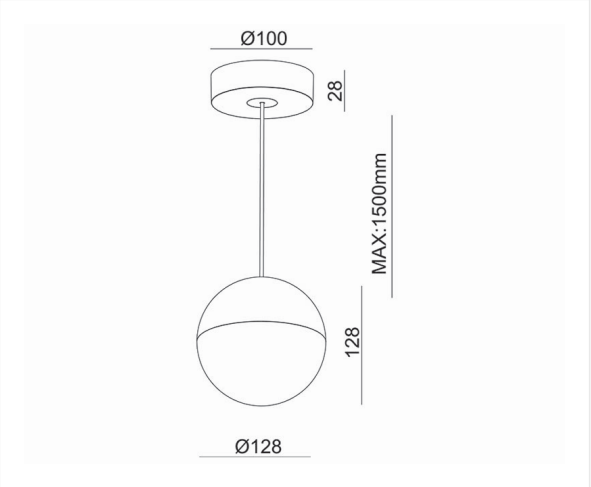

11 W 230 V IP 20 CCT 3000K 950 lm CRI >90

Reference	MIS1230B

Material	Aluminium
Colour	Matt Black RAL 9005
LED	Bridgelux 2835
CCT	3000K
Lumen	950 lm
CRI	>90
IP	IP20
Energy label	E

Remarks

- Triac dimmable
- cable 1,5m adjustable

Uni-Bright
Belcrownlaan 13 Q
2100 Antwerpen

T: +32 (0)3 641 61 40
E: info@unibright.be

BTW BE 0431.540.033
RPR Antwerpen, department Antwerpen