Xline corner profile white



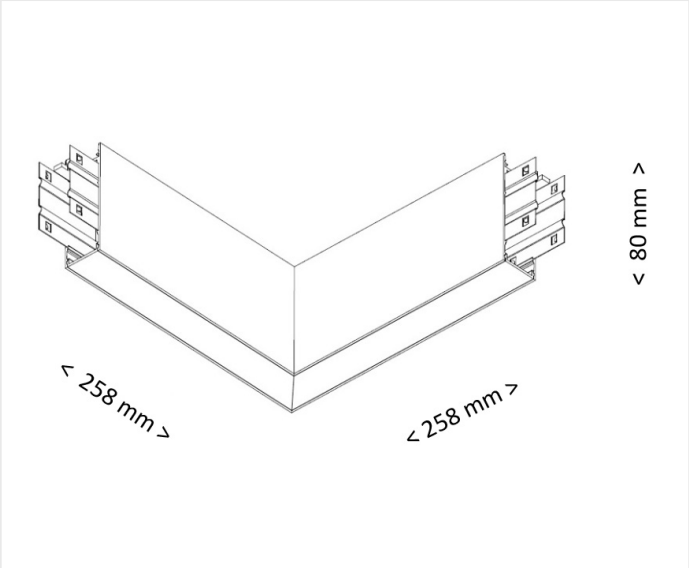

The Xline profiles are not only individually connectable, but can be applied in versatile configurations by using modular connecting profiles of different lenghts and corners.

Reference	XLCO258WW
Dimensions	258 x 34 mm
Height	80 mm
Material	Aluminium
Coulour	White RAL 9003

Remarks

• To connect with Xline Beam and Xline Strip
• End caps and fitting kit included.
• Allows to connect different profiles without visible juncture.

Uni-Bright
Belcrownlaan 13 Q
2100 Antwerpen

T: +32 (0)3 641 61 40
E: info@unibright.be

BTW BE 0431.540.033
RPR Antwerpen, department Antwerpen