Xline axxent 5 downlight



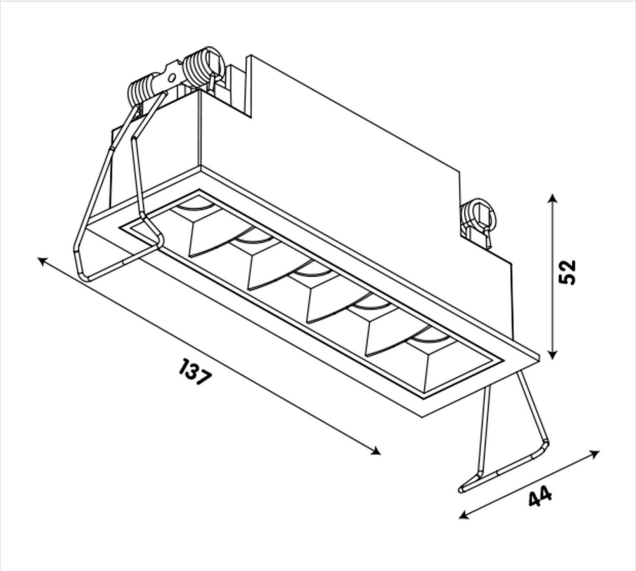

Design spot with ultra powerful Osram Leds placed in a very compact reflector giving a unique architectural result.

10 W IP 20 CCT 3000K 1000 lm CRI 80

Reference	AX52BW
Dimensions	137 x 44 mm
Height	75 mm
Cut-out size	130 x 36 mm
Material	Aluminium
Coulour	White / black
LED	5 x 2W Osram Oslon Square
CCT	3000K
Lumen	1000 lm
Lifetime +/-	40 000 hr
LED current	700 mA
CRI	90
Beam	50°
Energy label	E

Uni-Bright
Belcrownlaan 13 Q
2100 Antwerpen

T: +32 (0)3 641 61 40
E: info@unibright.be

BTW BE 0431.540.033
RPR Antwerpen, department Antwerpen