Xline trimless mounting kit



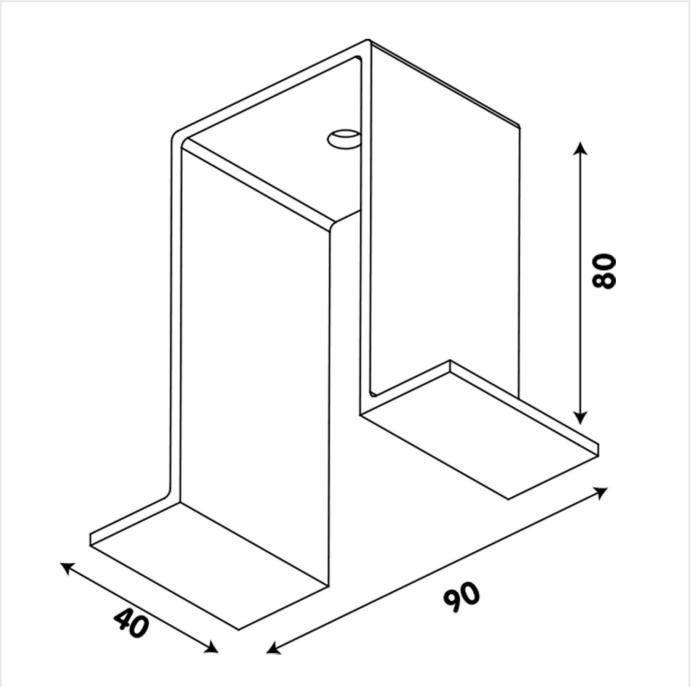

Reference	XLTRMO
Cut-out size	minimum 39 mm x length profile
Height	12,5 cm

Uni-Bright
Belcrownlaan 13 Q
2100 Antwerpen

T: +32 (0)3 641 61 40
E: info@unibright.be

BTW BE 0431.540.033
RPR Antwerpen, department Antwerpen