Xline Beam 20 white



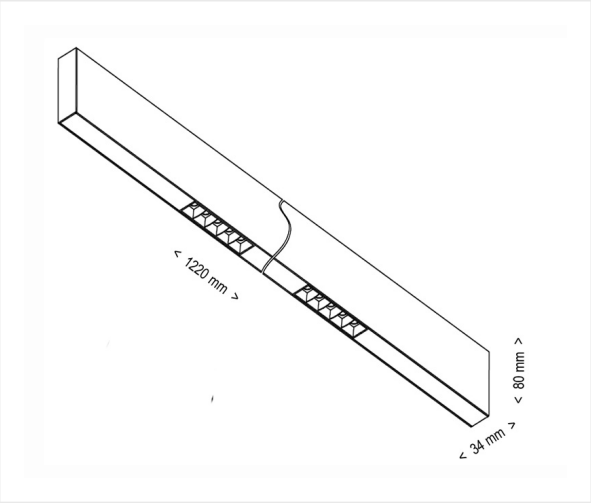

Design aluminum profile equipped with extremely powerful Osram LEDs placed iin a very compact reflector giving a unique architectural result. Xline Beam offers a superb and elegant bundle of light.

25 W 230 V IP 20 CCT 3000K 2000 lm CRI 90

Reference	XLB252WB

Dimensions	1220 x 34 mm
Height	80 mm
Material	Aluminium
Coulour	White RAL 9003 / Black RAL 9005
LED	2 x 5 x 2 W Osram - Oslon Square
CCT	3000K
Lumen	2 x 1000 lm
Lifetime +/-	40 000 hr
LED current	700 mA
CRI	90
Beam	50°
UGR	<18
Energy label	E

Remarks

- Connector XLCP3 required for aligning the profiles
- LED Driver incl.
- DALI Dimmable

Uni-Bright
Belcrownlaan 13 Q
2100 Antwerpen

T: +32 (0)3 641 61 40
E: info@unibright.be

BTW BE 0431.540.033
RPR Antwerpen, department Antwerpen